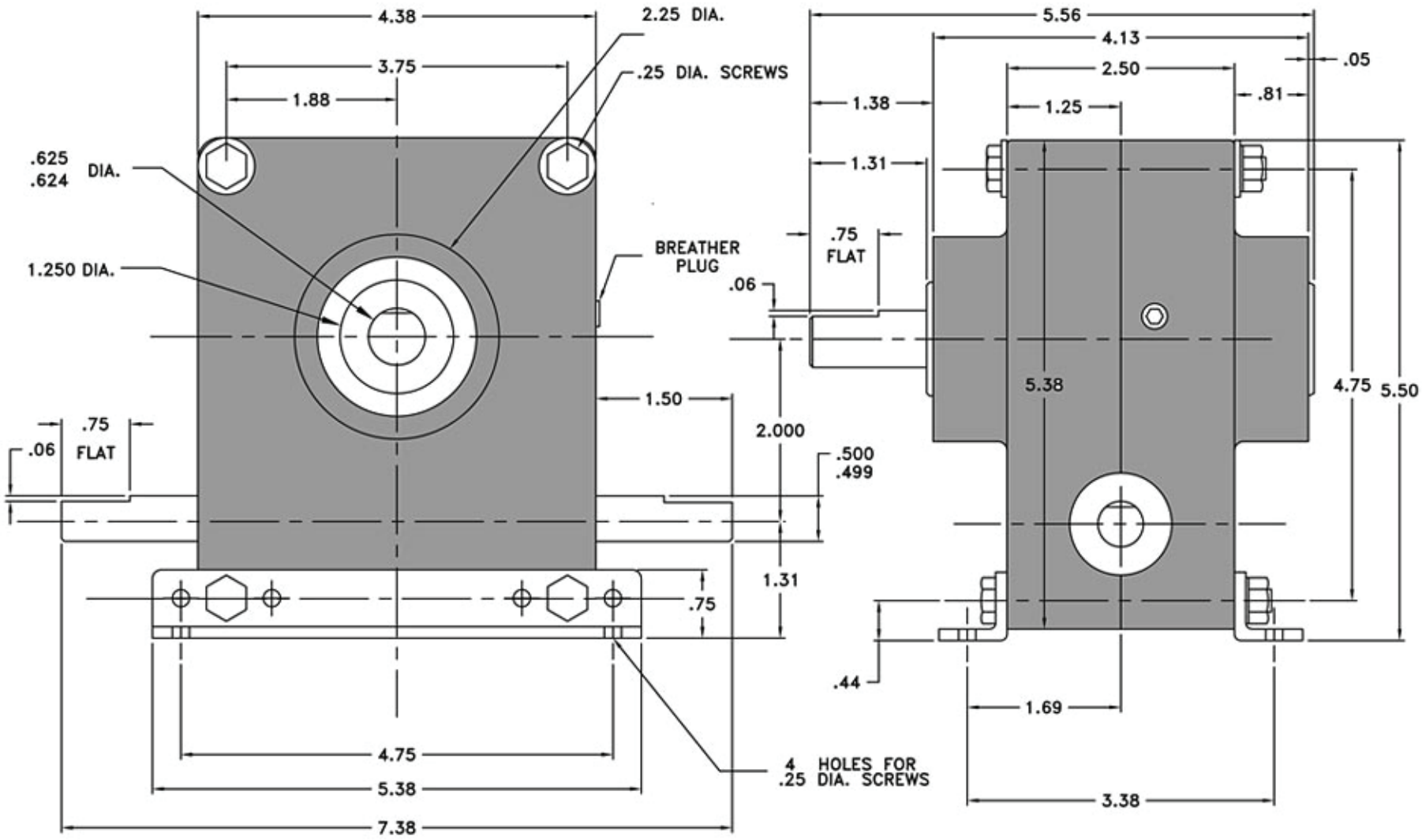

Torque Transmission

WORM GEAR SPEED REDUCERS, SW-5S

Phone: 440-352-8995 • Email: sales@torquetrans.com

Torquetrans.com